BELCHFIRE®

BFCX – LADLE PRE-HEATER KIT ASSEMBLY

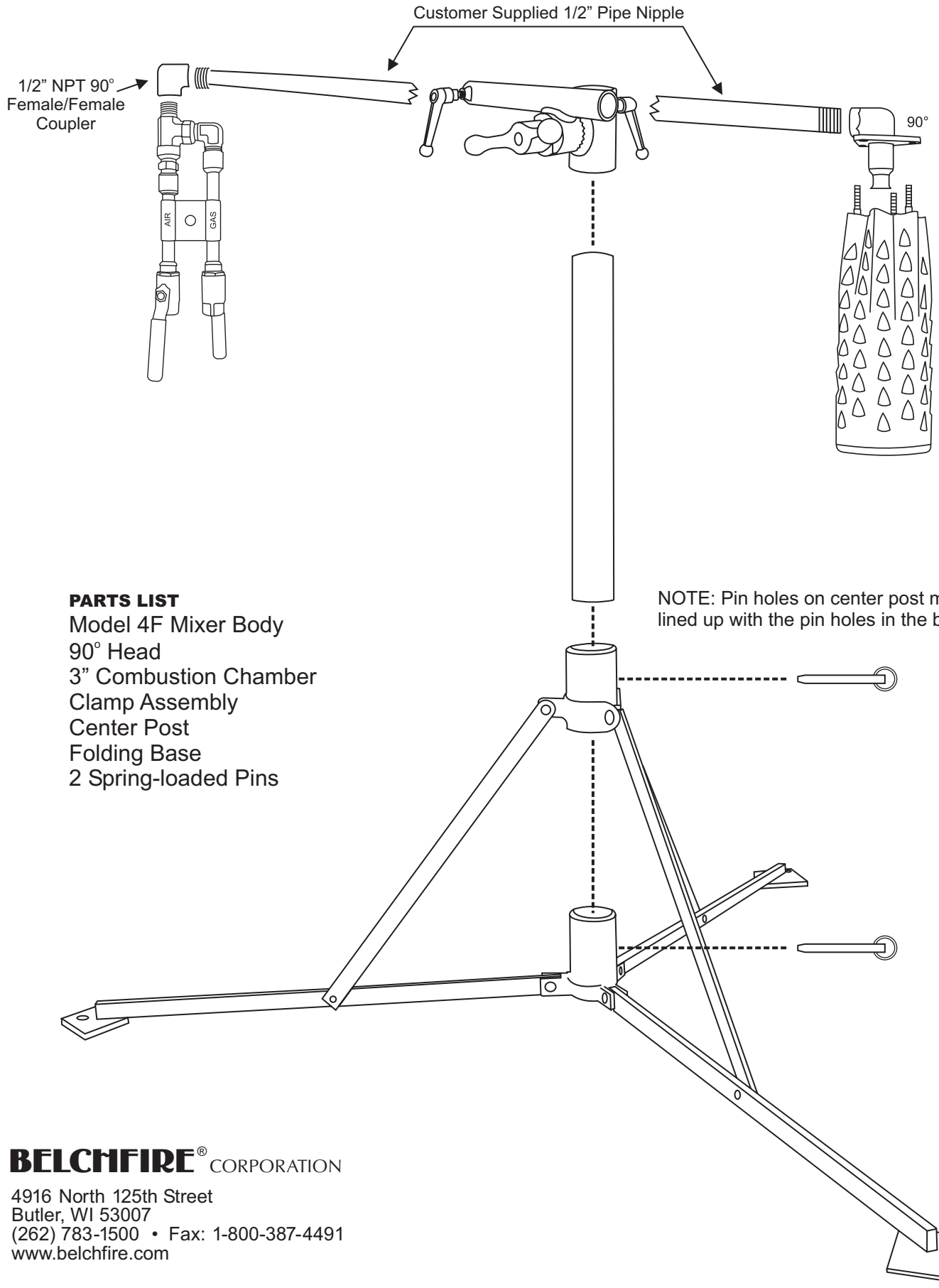

PARTS LIST

Model 4F Mixer Body
90° Head
3” Combustion Chamber
Clamp Assembly
Center Post
Folding Base
2 Spring-loaded Pins

NOTE: Pin holes on center post must be lined up with the pin holes in the base.

BELCHFIRE® CORPORATION

4916 North 125th Street
Butler, WI 53007
(262) 783-1500 • Fax: 1-800-387-4491
www.belchfire.com